US012728225B2

(12) **United States Patent**
Graber

(10) **Patent No.: US 12,728,225 B2**
(45) **Date of Patent: Sep. 8, 2026**

(54) **COMBINATION ENDOTRACHEAL TUBE STYLET WITH MEDICATION ATOMIZATION SYSTEM**

(71) Applicant: **THE REGENTS OF THE UNIVERSITY OF CALIFORNIA**, Oakland, CA (US)

(72) Inventor: **Taylor J. Graber**, Scottsdale, AZ (US)

(73) Assignee: **THE REGENTS OF THE UNIVERSITY OF CALIFORNIA**, Oakland, CA (US)

(*) Notice: Subject to any disclaimer, the term of this patent is extended or adjusted under 35 U.S.C. 154(b) by 940 days.

(21) Appl. No.: **17/797,097**

(22) PCT Filed: **Mar. 9, 2021**

(86) PCT No.: **PCT/US2021/021556**
§ 371 (c)(1),
(2) Date: **Aug. 2, 2022**

(87) PCT Pub. No.: **WO2021/183550**
PCT Pub. Date: **Sep. 6, 2021**

(65) **Prior Publication Data**

US 2023/0058976 A1 Feb. 23, 2023

Related U.S. Application Data

(60) Provisional application No. 62/987,071, filed on Mar. 9, 2020.

(51) **Int. Cl.**

A61M 19/00	(2006.01)
A61M 11/00	(2006.01)
A61M 16/04	(2006.01)

(52) **U.S. Cl.**
CPC ***A61M 19/00*** (2013.01); ***A61M 11/007*** (2014.02); ***A61M 16/0488*** (2013.01); *A61M 2202/048* (2013.01)

(58) **Field of Classification Search**
CPC A61M 16/0488; A61M 11/007
See application file for complete search history.

(56) **References Cited**

U.S. PATENT DOCUMENTS

2,541,402 A * 2/1951 Caine A61B 1/2676 128/200.26
4,182,326 A 1/1980 Ogle
(Continued)

FOREIGN PATENT DOCUMENTS

AU 2016213800 A1 9/2016

OTHER PUBLICATIONS

Haas, C., et al., Endotracheal Tubes: Old and New, Respiratory Care, Jun. 2014, pp. 933-955, vol. 59.
(Continued)

Primary Examiner — Bradley H Philips
(74) *Attorney, Agent, or Firm* — Eleanor Musick; Torrey Pines Law Group PC

(57) **ABSTRACT**

A combination stylet device for use in guiding an endotracheal tube during an intubation procedure includes an elongated hollow sleeve having a fitting at one end configured for mating with a syringe and a nozzle at the second end for generating a fine spray of a liquid forward from the second end. An elongated bendable guiding stylet is disposed coaxially within the sleeve to define a channel through which pressurized liquid is conducted from the fitting to the nozzle. The sleeve is inserted into the endotracheal tube during intubation to guide the insertion and to allow for administration a medication from the end of the endotracheal tube.

14 Claims, 8 Drawing Sheets

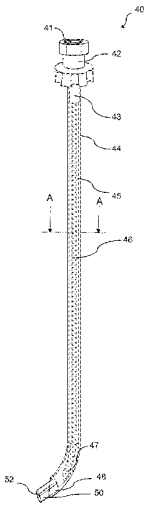

(56) **References Cited**

U.S. PATENT DOCUMENTS

4,402,684	A *	9/1983	Jessup	A61M 25/0102 128/207.14
5,257,620	A *	11/1993	Schermerhorn	A61M 16/0463 128/200.26
5,730,123	A *	3/1998	Lorenzen	A61M 39/26 128/207.14
6,112,743	A *	9/2000	Denton	A61M 11/06 128/200.14
6,698,429	B2 *	3/2004	Croll	A61M 16/0486 128/207.14
7,389,947	B2	6/2008	Denton	
10,335,559	B2	7/2019	Herskovic	
10,888,260	B2	1/2021	Edelhauser et al.	
2002/0108614	A1	8/2002	Schultz	
2005/0235998	A1	10/2005	Tresnak et al.	
2006/0081253	A1	4/2006	Nelson	
2012/0184921	A1 *	7/2012	Brillant	A61M 16/0484 604/533
2013/0167839	A1 *	7/2013	Vomastek	A61M 16/0488 128/200.26
2017/0182265	A1 *	6/2017	Herskovic	A61M 5/16881

OTHER PUBLICATIONS

PCT/US2021/021556 International Search Report and Written Opinion, Jun. 22, 2021, 8 pages.

* cited by examiner

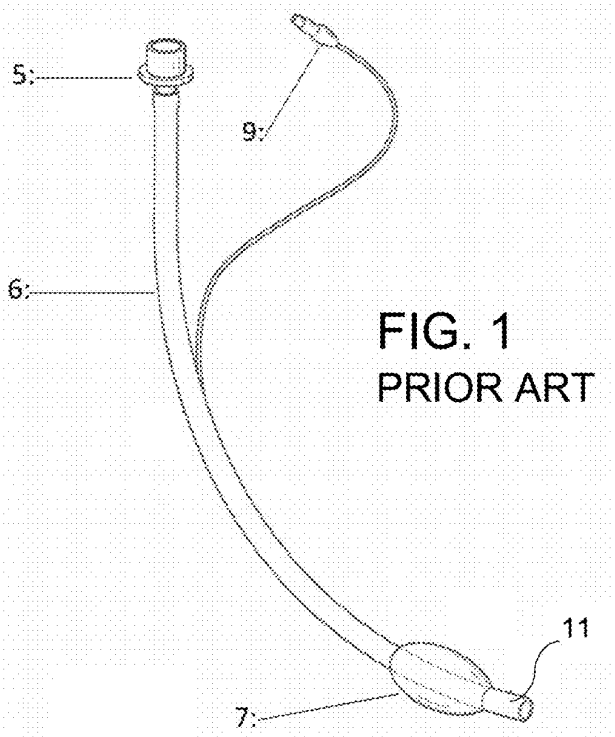

FIG. 1
PRIOR ART

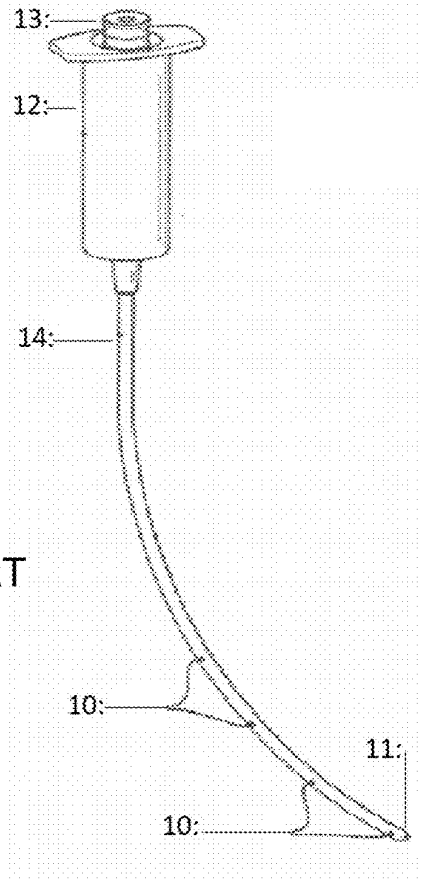

FIG. 2
PRIOR ART

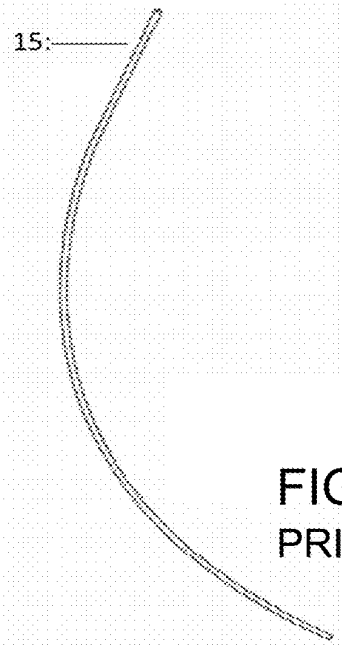

FIG. 3
PRIOR ART

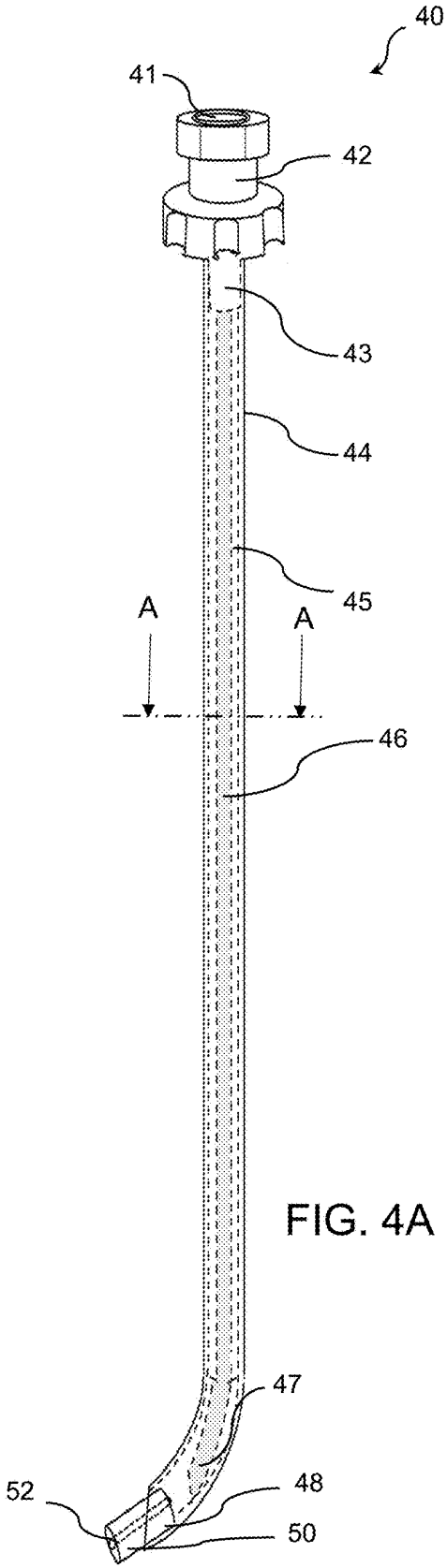

FIG. 4A

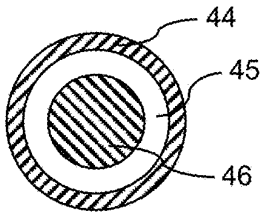

FIG. 4B

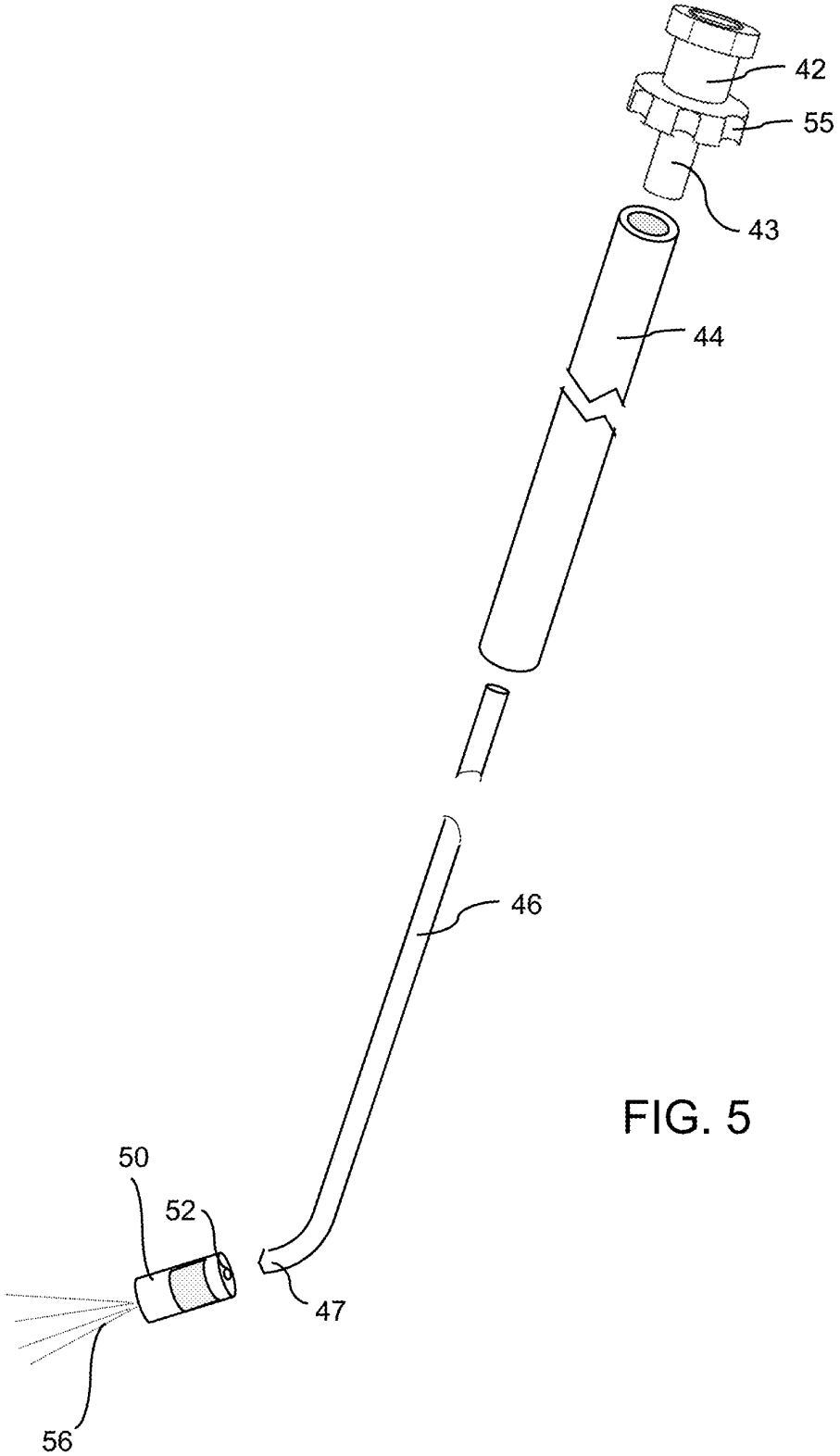

FIG. 5

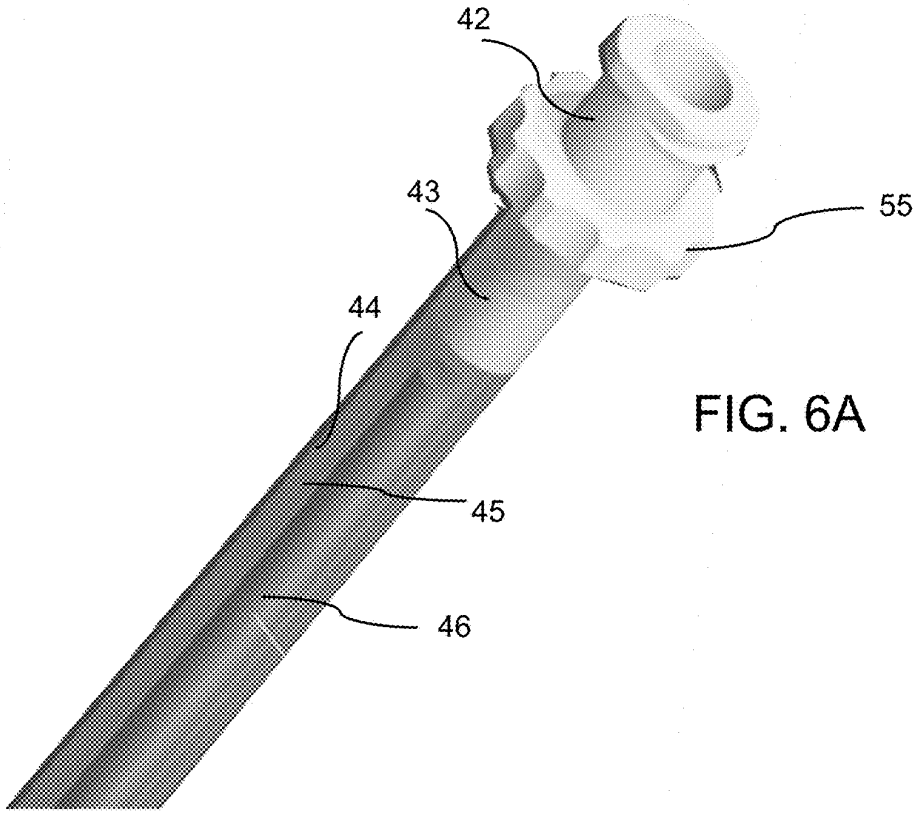

FIG. 6A

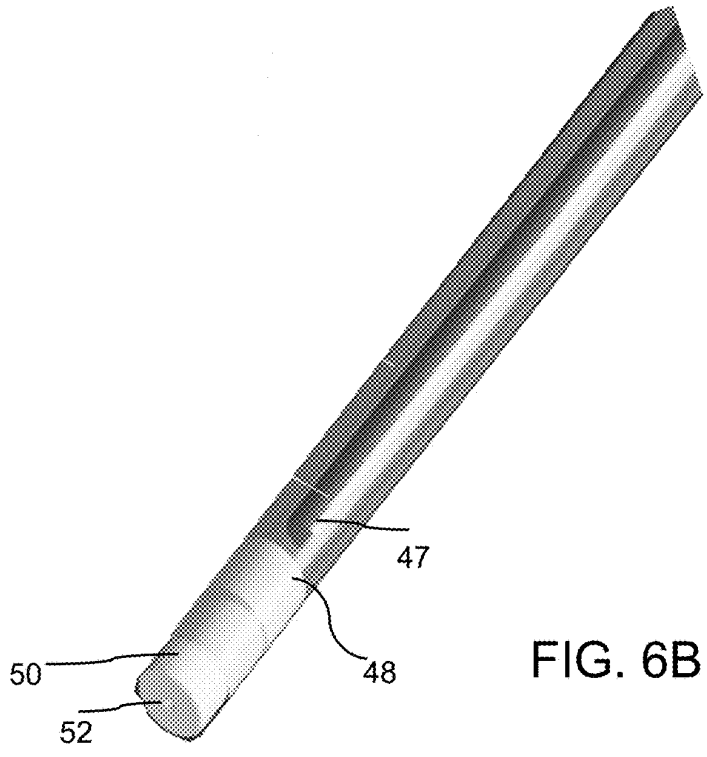

FIG. 6B

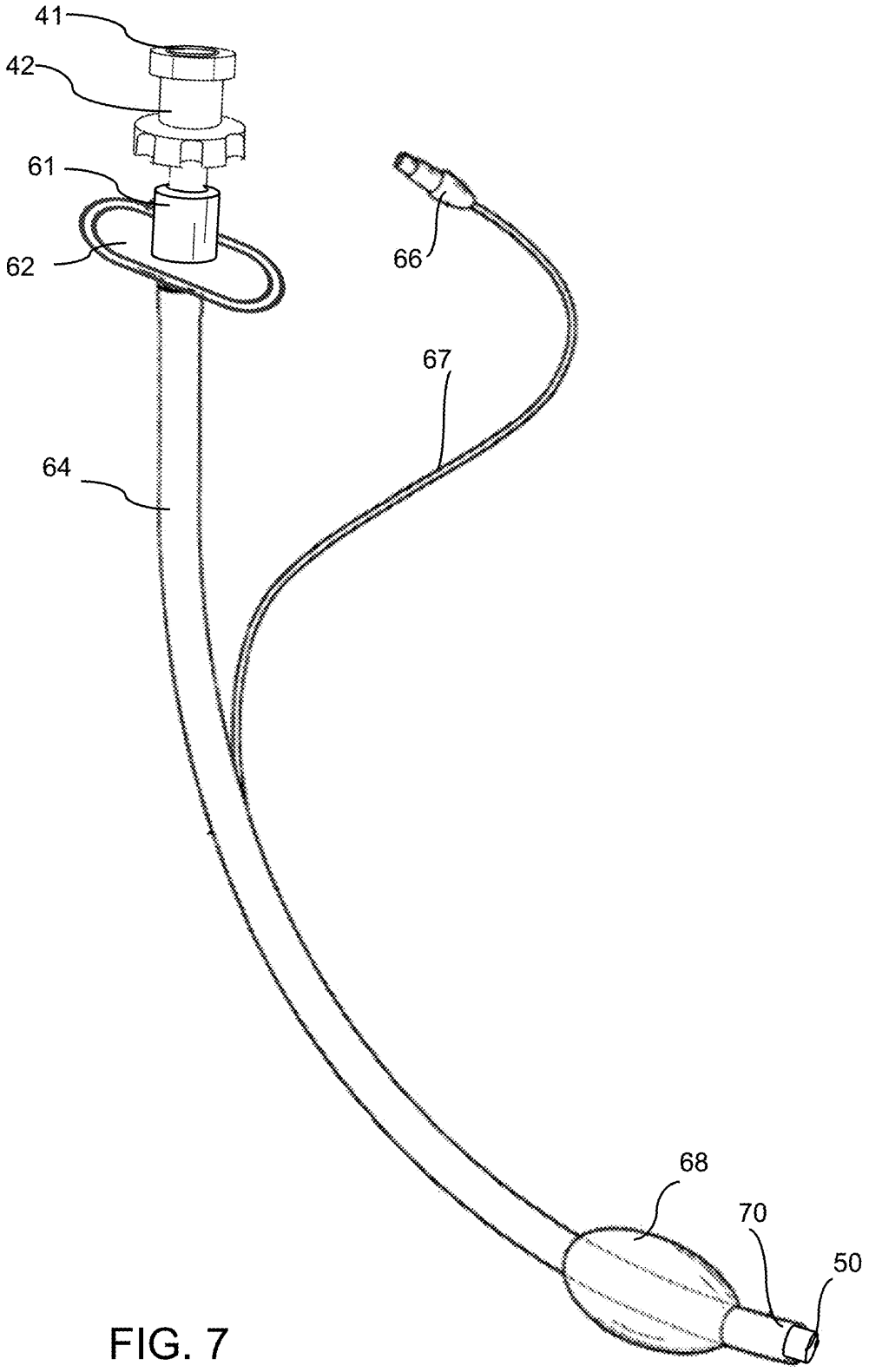

FIG. 7

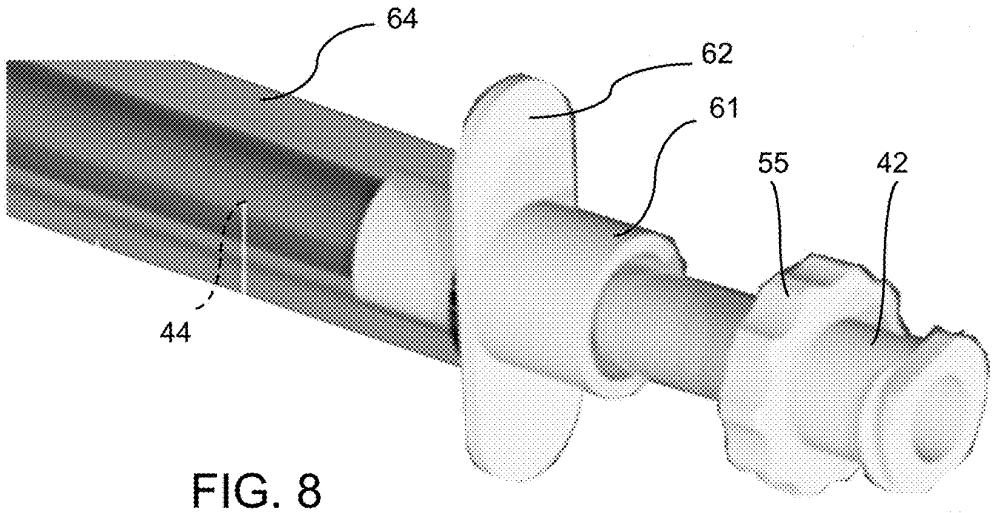

FIG. 8

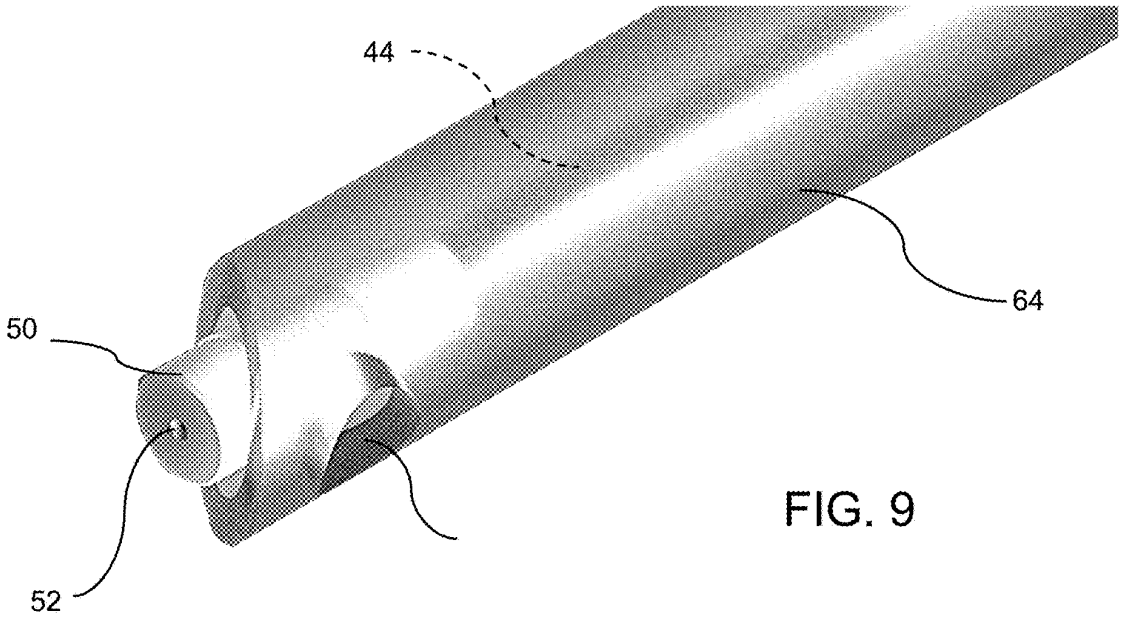

FIG. 9

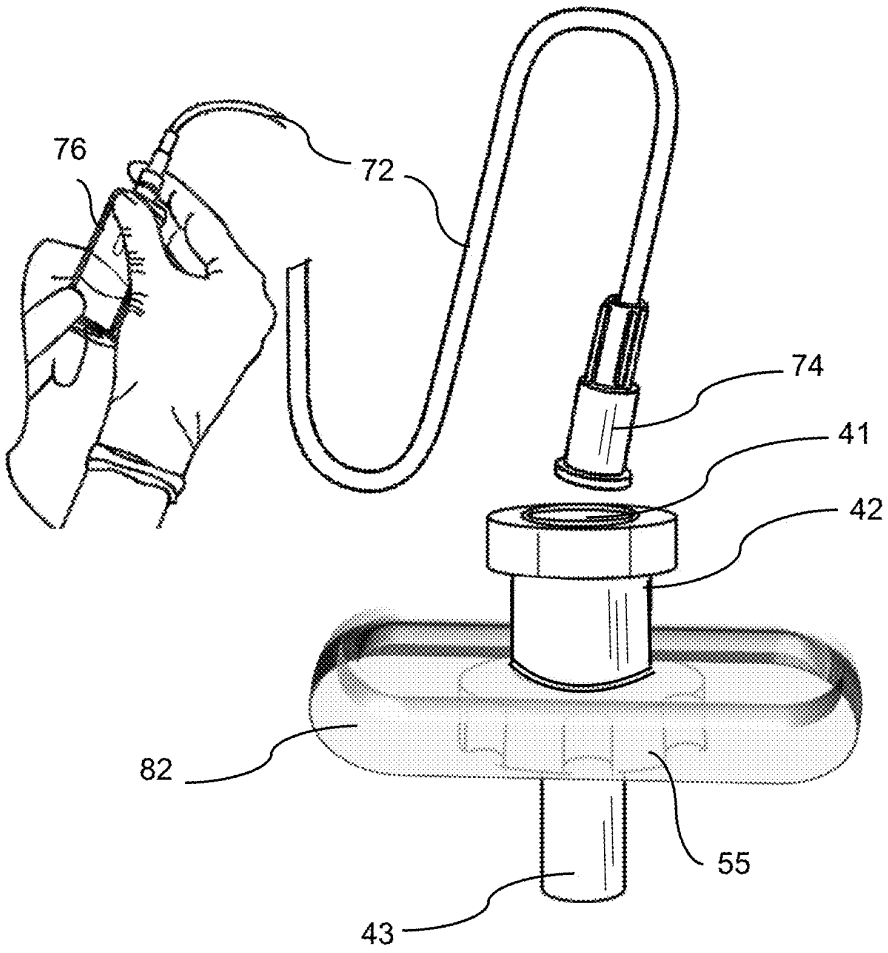

FIG. 10

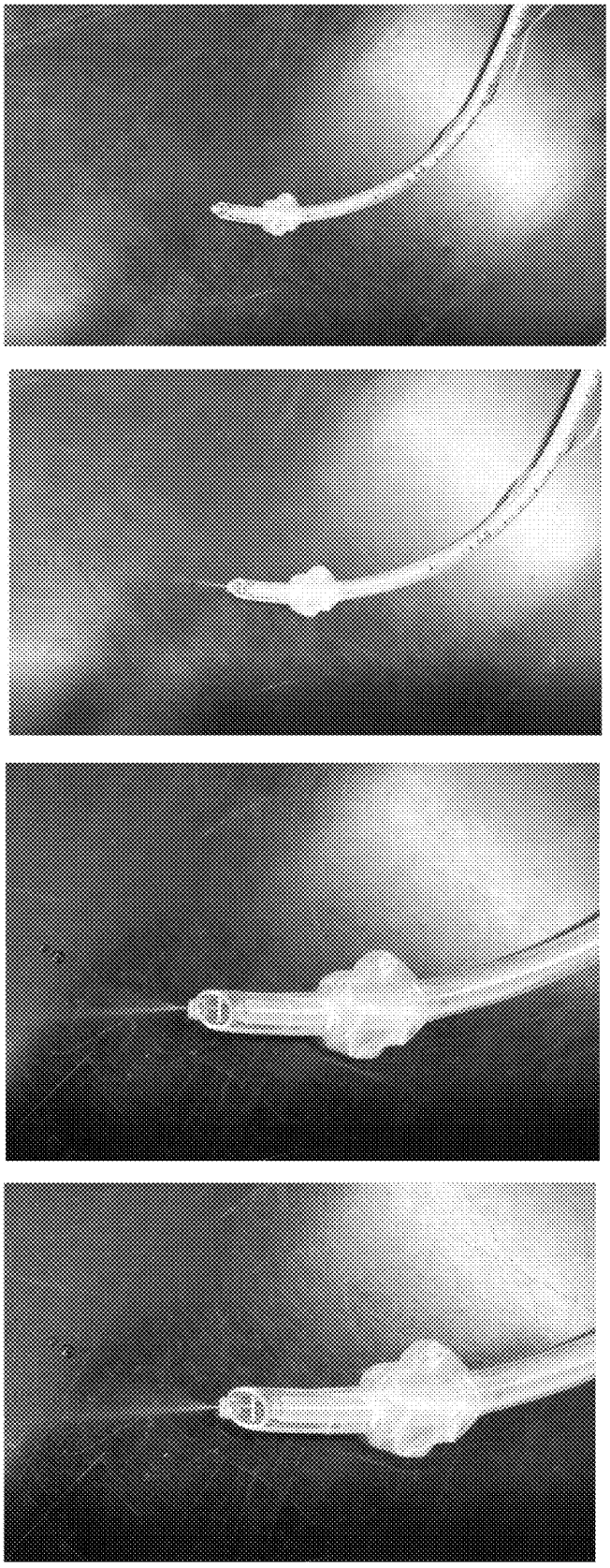

FIG. 11

COMBINATION ENDOTRACHEAL TUBE STYLET WITH MEDICATION ATOMIZATION SYSTEM

RELATED APPLICATIONS

This application is a 371 national stage filing of International Application No. PCT/US2021/021556, filed Mar. 9, 2021, which claims the benefit of the priority of U.S. Application No. 62/987,071, filed Mar. 9, 2020, each of which is incorporated herein by reference in its entirety.

FIELD OF THE INVENTION

The present invention relates to an endotracheal tube having a combined guiding stylet and medication atomization system for use in an intubation procedure.

BACKGROUND OF THE INVENTION

Endotracheal intubation is one of the more common procedures performed in hospitals and in emergency situations generally, yet it can still present challenges to even the most experienced practitioners. Difficult intubation, defined by more than two intubation attempts, is associated with life-threatening complications. These challenges have led to the development of enhanced devices, e.g., add-ons to the endotracheal tube (ETT), and procedures, including identifying risk factors for difficult intubation. One significant device improvement is the stylet, which is a rigid but malleable introducer that fits inside the ETT and allows for manipulation of the tube shape, usually into a hockey stick shape, to facilitate passage of the tube through the laryngeal inlet. The stylet also provides additional rigidity to the tube which may aid in tube passage.

Another function that has been added to ETTs is the ability to administer medications to the patient while intubated. Medications such as epinephrine, atropine, diazepam, and naloxone have shown rapid and efficacious pharmacodynamics when administered via ETT. This capability is particularly beneficial in cardiac arrest situations when there is not an existing intravenous cannula to supply intravenous medications.

The prior art includes well-documented examples of endotracheal tubes with inner inserted stylets, such as that shown in FIGS. **1-3**, the purpose of which is to guide the tube during intubation or placement within trachea (windpipe) of the patient in order to maintain an open airway or to serve as a conduit through which to administer certain drugs. An example of a typical endotracheal tube (ETT) **6** is depicted in FIG. **1** and includes an upper proximal end **5** and an inserting and distal end **11**. Upon being located at the correct position during such as the intubation process, an inflatable cuff **7** located near the distal end is expanded through a separate line terminating at proximal end nipple **9**. Once inflated, cuff **7** keeps the ETT **6** at the desired location in the trachea while maintaining a sealed airway to deliver positive pressure ventilation and prevent aspiration of gastric or oropharyngeal contents.

FIG. **2** provides an example of a prior art laryngotracheal cannula device that provides for the administration of medication. As shown, a plastic or glass cylinder or vial **12** disposed near the proximal end of cannula **14** may contain a volume of an anesthetic composition such as Lidocaine. Cannula **14** has a plurality of apertures **10** formed near its distal end **11** to release the medication. This cannula is designed to be used prior to placement of the ETT but is not designed to be used in conjunction with the ETT during placement. Furthermore, the design of existing laryngotracheal cannulation devices do not provide for the injection of medications that are not pre-filled into the vial. As a result, there is no mechanism by which a clinician can introduce other medications to inject into the trachea other than lidocaine, such as which may be beneficial in cardiac arrest situations when there is not an existing intravenous cannula to supply intravenous medications.

FIG. **3** illustrates a prior art guiding stylet **15**, which typically consists of a malleable metal wire designed to be inserted into the center of endotracheal tube **6** to add rigidity to the tube so that it conforms better to the upper airway anatomy of the specific individual and assist in successful placement. The proximal end of the guiding stylet **15** is usually bent on insertion into the ETT to form an abutment shoulder which acts as an abutment stop relative to the inserting upper end **5** of the ETT **6**, thereby preventing over-insertion of the stylet which could result in the stylet projecting beyond the distal end **11** of the ETT, presenting the risk of perforation of the trachea.

The existing laryngotracheal cannulation device of FIG. **2** is not long enough to span the full length of the endotracheal tube **6** and, therefore, cannot be placed inside of the endotracheal tube **6** alongside an existing guiding stylet. As a result, practitioners must locate the tracheal aperture and vocal cords and then perform two separate motions, first positioning the laryngotracheal cannulation device to anesthetize the vocal cords and trachea, then placing the endotracheal tube with the guiding stylet. The use of two separate devices increases clinical time and can potentially lead to patient decompensation during an intubation. Accordingly, the need remains for a single device capable of performing multiple functions for intubation.

SUMMARY OF THE INVENTION

The inventive device provides the attributes of a stylet and a mucosal atomization system into a combination assembly configured for insertion into an endotracheal tube to facilitate an intubation procedure. When placed within an ETT during insertion into the patient's trachea, the assembly performs the dual functions of guiding the endotracheal tube and facilitating the administration of a medication to assist in more efficiently anesthetizing the insertion region (vocal cords, larynx, and trachea before and during the intubation procedure.

In one aspect of the invention, a combination stylet device for use in guiding an endotracheal tube during an intubation procedure includes an elongated hollow sleeve having a fitting at one end configured for mating with a syringe and a nozzle at the second end for generating a fine spray of a liquid. An elongated bendable guiding stylet is disposed coaxially within the sleeve to define a channel through which pressurized liquid is conducted from the fitting to the nozzle. The sleeve is inserted into the endotracheal tube during intubation to guide the insertion and to allow for administration a medication from the end of the endotracheal tube.

In an exemplary embodiment, a syringe is connected at the proximal end to a Luer-style fitting that is configured for releasable attachment to a syringe or medication reservoir, which may contain a liquid such as a topical anesthesia. The fitting is connected to the proximal end of an elongated sleeve that coaxially encases a flexible guiding stylet which imparts flexibility and rigidity to the assembly. A channel defined between the inner wall of the sleeve and the guiding

stylet communicates liquid from the proximal end to the distal end of the assembly. The sleeve terminates at a nozzle tip that is configured to release an atomized spray of liquid that was communicated, under pressure, through the channel. The assembly is configured for insertion into an endotracheal tube to guide intubation and to provide for administration of a liquid spray from the end of the assembly.

In another aspect of the invention, the combination stylet device for use in guiding an endotracheal tube during an intubation procedure includes an elongated sleeve having a hollow interior; a fitting disposed at a proximal end of the sleeve, the fitting having a connector opening configured for mating with a syringe; a nozzle disposed at a distal end of the sleeve, the nozzle configured to generating a fine spray of a liquid forward of the distal end; and an elongated bendable guiding stylet disposed coaxially within the sleeve between the fitting and the nozzle, wherein a channel is defined between an outer surface of the guiding stylet and an inner surface of the sleeve, and wherein liquid introduced under pressure through the fitting is communicated by the channel to the nozzle; wherein the sleeve is configured for insertion into the endotracheal tube during intubation, the sleeve having a length configured to position the nozzle near a distal end of the endotracheal tube. In some embodiments, the fitting is configured for releasable attachment to the syringe, and wherein the syringe generates sufficient pressure to force liquid in the syringe out of the nozzle. The liquid may be a topical anesthetic.

In some embodiments, the fitting may further include an insertion stop configured to limit a length of insertion length within the endotracheal tube. The fitting may be a Luer-style fitting configured for releasably mating with a Luer-style syringe. A connector may be disposed at an end of an elongated tubing, configured for releasably mating with the fitting where the elongated tubing has a length configured to allow administration of additional liquids at a non-interfering distance from the intubation procedure. In some embodiments, a removable stop may be provided for attachment to the fitting or the sleeve to limit insertion of the device to a predetermined insertion depth within the endotracheal tube.

In still another aspect of the invention, a stylet device for guiding an endotracheal tube during intubation includes an elongated cylindrical sleeve having a hollow interior, the sleeve formed from a flexible medical grade plastic material; an elongated bendable guiding stylet disposed coaxially within the sleeve, the guiding stylet having an outer diameter smaller than an inner diameter of the sleeve so that a channel is defined between the guiding stylet and the sleeve; a fitting disposed at a proximal end of the sleeve to define a liquid-tight seal, the fitting having a connector opening configured for mating with a syringe; and a nozzle disposed at a distal end of the sleeve, the nozzle configured to generating a fine spray of a liquid forward of the distal end when a pressure is applied at the proximal end of the sleeve; wherein the sleeve is configured for coaxial insertion into the endotracheal tube during intubation, the sleeve having a length configured to position the nozzle near a distal end of the endotracheal tube. In some embodiments, the fitting is configured for releasable attachment to the syringe, and wherein the syringe generates sufficient pressure to force liquid in the syringe out of the nozzle. The liquid may be a topical anesthetic.

In some embodiments, the fitting may further include an insertion stop configured to limit a length of insertion length within the endotracheal tube. The fitting may be a Luer-style fitting configured for releasably mating with a Luer-style syringe. A connector may be disposed at an end of an elongated tubing, configured for releasably mating with the fitting where the elongated tubing has a length configured to allow administration of additional liquids at a non-interfering distance from the intubation procedure. In some embodiments, a removable stop may be provided for attachment to the fitting or the sleeve to limit insertion of the device to a predetermined insertion depth within the endotracheal tube.

BRIEF DESCRIPTION OF THE DRAWINGS

FIG. **1** is a perspective view of an exemplary endotracheal tube according to the prior art.

FIG. **2** is a perspective view of an exemplary prior art laryngotracheal cannula with a medicinal vessel.

FIG. **3** is a perspective view of an exemplary endotracheal-tube form guiding stylet according to the prior art.

FIG. **4**A is a diagrammatic perspective view showing a combination ETT stylet according to an embodiment of the invention; FIG. **4**B is a cross-sectional view taken along line A-A of FIG. **4**A.

FIG. **5** is an exploded perspective view of the embodiment of FIG. **4**A

FIGS. **6**A and **6**B are detail views of the proximal and distal ends, respectively, of the combination ETT stylet according to an embodiment of the invention.

FIG. **7** is a perspective view of a ETT with the ETT stylet.

FIG. **8** is a detail view of the proximal end of the ETT and ETT stylet.

FIG. **9** illustrates an alternative configuration of the inventive ETT stylet inserted within an ETT.

FIG. **10** is a diagrammatic view of an embodiment of the proximal end of the inventive stylet with optional features for medication administration and an insertion stop.

FIG. **11** is a series of photographs of a prototype of the inventive design as used to produce a spray.

DETAILED DESCRIPTION OF EMBODIMENTS

The inventive assembly combines the attributes of prior art stylets and laryngo-tracheal anesthetizing cannula for insertion within an endotracheal tube (ETT) during intubation. The combination assembly can be used to manipulate and guide the ETT from its interior during insertion within the patient's trachea, in combination with more efficiently anesthetizing the insertion region (vocal cords, larynx, and trachea) both before, during, and potentially after the intubation procedure.

For purposes of the description herein, the inventive assembly, illustrated in FIGS. **4-11**, is alternately referred to as "the device", "the ETT stylet", or simply "the stylet", which is to be distinguished from conventional prior art stylets, such as the example shown in FIG. **3**.

The inventive ETT stylet **40** is a generally cylindrical elongated body into which is integrated a medication delivery. Referring to FIGS. **4**A, **4**B, **5**, **6**A and **6**B, stylet **40** includes a Luer-style fitting **42** with an opening **41** configured to mate with a standard syringe or other medication reservoir (not shown) for introducing liquid medication into the device. A medicinal syringe can be drawn according to the clinician's preferences and rapidly attached to fitting **42**, which, in the exemplary embodiment, is a Luer-style fitting, e.g., a Luer-Lock® connector (Becton Dickinson). This medicinal syringe can be filled with any number of medications, such as but not limited to a fluidic topical anesthetic such as Lidocaine. The present invention also contemplates the use of other pharmacological agents to deliver medica-

tion via the trans-tracheal route under certain conditions, and such as where an intravenous route is either unavailable or inappropriate.

It should be noted that while a Luer-style fitting is described with reference to the exemplary embodiments, those of skill in the art will recognize that other fluid attachment devices, including conventional commercial and specially designed connectors, may be used.

In the exemplary embodiment, fitting **42** includes a flange **55** extending radially from the central body and a cylindrical extension **43** at its distal end that inserts into the proximal end of sleeve **44**. Sleeve **44** is a hollow tube formed from flexible, resilient medical-grade plastic such as silicone, polydimethylsiloxane (PDMS), or similar bio-compatible material that is generally appropriate for medical applications. Typical properties of sleeve **44** include a smooth, low friction exterior surface with sufficient rigidity to resist crimping but sufficient flexibility and resilience to conform to the shape defined by the guiding stylet. Sleeve **44** is dimensioned to coaxially receive an elongated malleable guiding stylet **46** which extends most of the length of the sleeve. In some embodiments, guiding stylet **46** is loosely retained within sleeve **44**, i.e., unattached to the inner surface of sleeve and cylindrical extension **43**. Referring to FIG. **4**B, the inner diameter of sleeve **44** and the outer surface of guiding stylet **46** define a channel **45** that extends the length of the sleeve, allowing liquid introduced via opening **41** in fitting **44** to be passed through channel **45** and out through atomization nozzle **50**. In other embodiments, guiding stylet may be attached to extension **43** or partially attached at points within the interior surface of sleeve **44** as long as a channel is still present to allow fluid to by communicated the along the length of the sleeve. Nozzle **50** fits tightly within the distal end **48** of sleeve **44**, i.e., a liquid-tight seal, so that liquid within channel **45** is forced through small bore **52** to generate a fine mist or spray **56** (shown in FIG. **5**) that exits the distal end of the device. Pressure to force the liquid through bore **52** is provided by the syringe that is used to inject the liquid into fitting **42**.

A process for manufacturing the inventive device may involve molding or extrusion of the sleeve body followed by assembly to affix the nozzle, guiding stylet, and fitting into the sleeve. Note that the nozzle and fitting may be stabilized within the sleeve ends by a simple interference fit, or they may be attached via an adhesive, heat treatment or other well-known assembly process for plastic materials.

As shown in FIGS. **4**A, **6**A and **6**B, the length of guiding stylet **46** is slightly less than the length of sleeve **44**. These small gaps ensure that the injected liquid is able to enter channel **45** at the proximal end of sleeve **44** without obstruction by the proximal end of guiding stylet **46**, as well as entering bore **52** without obstruction by distal end **47** of the stylet.

Referring to FIG. **7**, the inventive ETT stylet **40** is shown inserted into the proximal end **61** of an ETT (such as that shown in FIG. **1**) with fitting **42** extending out of the ETT, leaving opening **41** accessible for injection of a medication via a syringe or other injector. Flange **55** on fitting **42** acts as an insertion stop to prevent the ETT stylet from over-insertion of the device past the desired distal tip of the endotracheal tube. ETT shoulder **62** provides a handle for manipulation of the ETT as well as a surface to apply a counter pressure to facilitate the motion needed to insert and slide the inventive ETT stylet into the ETT tube **64** as well as to hold the ETT in place when using a syringe to inject a medication into ETT stylet. The length of ETT stylet **40** is approximately the same as the overall length of the ETT, as indicated by the protrusion of nozzle **50** from the distal end **70** of ETT tube **64**. This allows the administration of a fine mist or spray of medication which can be directed at target tissues in the patient's anatomy (such as the vocal cords, larynx, trachea, or other desired structures) to anesthetize the tissue during intubation as well as to administer additional medications as needed after the patient has been intubated. As with prior art ETTs, a fitting **66** on the proximal end of fine tubing **67** provides for the introduction/release of pressurized air to expand/deflate inflatable cuff **68**. FIG. **8** provides a detailed view of the proximal end of ETT stylet **40** as inserted into ETT **60** with the elements as described with reference to FIG. **7**.

FIG. **9** illustrates an alternative configuration of the inventive ETT stylet inserted within an ETT. In this embodiment, the distal end **4** of the inventive stylet **40**, represented by nozzle **50**, terminates at the same level as the distal end of the endotracheal tube **64**. A Murphy eye **66** is formed near the distal end of a standard endotracheal tube. This configuration allows medication to be administered outside of the tip of the endotracheal tube, but without the ETT stylet extending past the end of the endotracheal tube, thus reducing the risk of tracheal injury from the stylet.

FIG. **10** illustrates additional features that can be utilized with the inventive ETT stylet. As previously noted, it is sometimes necessary to administer medication to a patient who is in the process of being intubated, or after the ETT has been inserted. For example, in a "code blue" situation where the patient is in arrest but no intravenous access is present, the inventive ETT stylet can be used to administer medication such as epinephrine, atropine, etc. In conventional ETTs, such procedures can be ineffective due to absorption of the medication into the plastic endotracheal tube. Sleeve **44** of the inventive device is constructed of materials that are not subject to such limitations. Medication can be easily administered by inserting a mating fitting **74** into opening **41** of fitting **42** of the ETT stylet. The proximal end of fine tubing **72** includes a standard fitting configured to permit attachment or insertion of a syringe **76** for injection of the appropriate medication. The length of tubing **72** can be such that an assistant can administer the medication from the side within interfering with the practitioner, who is focused on the intubation procedure or other medical needs of the patient.

A second feature shown in FIG. **10** is a shoulder stop **82** that can be removably attached to the ETT stylet to limit the insertion of the ETT stylet to prevent the device from extending past the distal tip of the endotracheal tube. Shoulder stop **82** may be formed from rubber, silicon, PDMS, or a similar resilient material. As illustrated, shoulder stop **82** sits atop flange **55**, but it may be positioned at different locations along the length of ETT stylet to vary the insertable length of the device. This variability would allow the combination ETT stylet to be used for any number of different sized endotracheal tubes. It should be noted that the two additional features are illustrated in the same figure for expediency only, and they can be used as separate add-ons to the inventive device.

FIG. **11** is a set of photographs showing a prototype of the inventive ETT stylet inserted into a typical endotracheal tube. The top image shows the ETT prior to application of pressure. The second image shows initiation of the fluid spray. The third and fourth images show a well-dispersed fine spray being generated at the distal end of the device.

The present invention contemplates any number of combinations and variations in which the features of a form-guiding stylet along with that of a medicinal delivery

cannula are combined into single assembly for insertion into and providing guidance for an endotracheal tube during intubation along with both pre-procedure and post-procedure anesthetizing of the patient's trachea. For example, the inner stylet material and configuration may include any type of solid, mesh, grid, coil, or weave construction the forms an elongated structure of malleable and bendable (soft) metal, which can be integrated into the sleeve-shaped wall of a silastic (i.e., defined as sanitary and flexible plastic) body of the device. Other variations and combinations of elements disclosed herein will become readily apparent to those in the art based on the teaching of the present disclosure.

The invention claimed is:

1. A combination stylet device for use in guiding an endotracheal tube during an intubation procedure, the device comprising:

an elongated sleeve having a hollow interior, a sleeve inner diameter, and a sleeve length;

a fitting disposed at a proximal end of the sleeve, the fitting having a connector opening configured for mating with a syringe and a cylindrical extension having an outer diameter configured to closely fit the sleeve inner diameter at the proximal end of the sleeve;

a nozzle disposed at a distal end of the sleeve, the nozzle comprising a cylindrical body having an outer diameter configured to closely fit the sleeve inner diameter at the distal end of the sleeve to form a liquid-tight seal, the cylindrical body having a concentric bore extending therethrough with an outlet at a distal tip, wherein the outlet is configured to project a fine spray axially forward beyond the distal tip when a pressurized liquid is introduced into the sleeve; and

an elongated bendable guiding stylet disposed coaxially within the sleeve between the fitting and the nozzle, the stylet having a stylet diameter and a stylet length, wherein the stylet diameter is smaller than the first inner diameter so that a channel is defined between an outer surface of the guiding stylet and an inner surface of the sleeve, and wherein the stylet length is less than the sleeve length so that a gap is defined between a distal end of the stylet and a proximal end of the nozzle, wherein pressurized liquid introduced through the fitting into the sleeve is communicated by the channel and the gap to the bore of the nozzle;

wherein the sleeve is configured for insertion into the endotracheal tube during intubation, and wherein the sleeve length is configured to position the nozzle near to and partially protruding from a distal end of the endotracheal tube while the combination stylet device only projects the fine spray axially forward the distal end of the endotracheal tube.

2. The device of claim **1**, wherein the fitting is configured for releasable attachment to the syringe, and wherein the syringe generates sufficient pressure to force liquid in the syringe out of the nozzle.

3. The device of claim **1**, wherein the liquid is a topical anesthetic.

4. The device of claim **1**, wherein the fitting further comprises an insertion stop configured to limit an insertion length within the endotracheal tube.

5. The device of claim **1**, wherein the fitting comprises a Luer-style fitting configured for releasably mating with a Luer-style syringe.

6. The device of claim **1**, further comprising a connector disposed at an end of an elongated tubing, the connector configured for releasably mating with the fitting and the elongated tubing having a length configured to allow administration of additional liquids at a non-interfering distance from the intubation procedure.

7. The device of claim **1**, further comprising a removable stop configured for attachment to the fitting or the sleeve to limit insertion of the device to a predetermined insertion depth within the endotracheal tube.

8. A stylet device for guiding an endotracheal tube during intubation, the device comprising:

an elongated cylindrical sleeve having a hollow interior and a sleeve length, the sleeve formed from a flexible medical grade plastic material;

an elongated bendable guiding stylet disposed coaxially within the sleeve, the guiding stylet having a stylet length and an outer diameter smaller than an inner diameter of the sleeve so that a channel is defined between the guiding stylet and the sleeve;

a fitting disposed at a proximal end of the sleeve to define a liquid-tight seal, the fitting having a connector opening configured for mating with a syringe; and

a nozzle disposed at a distal end of the sleeve, the nozzle comprising a cylindrical body having an outer diameter configured to closely fit the sleeve inner diameter at the distal end of the sleeve to form a liquid-tight seal, the cylindrical body having a concentric bore with an outlet at a distal tip, wherein the stylet length is less than the sleeve length so that a gap is defined between a distal end of the guiding stylet and a proximal end of the nozzle, wherein pressurized liquid introduced through the fitting into the sleeve is communicated by the channel and the gap to the bore of the nozzle, wherein the outlet is configured to project a fine spray of the liquid axially forward beyond the distal tip;

wherein the sleeve is configured for coaxial insertion into the endotracheal tube during intubation, and wherein the sleeve length is configured to position the nozzle near to and partially protruding from a distal end of the endotracheal tube while the combination stylet device only projects the fine spray axially forward the distal end of the endotracheal tube.

9. The device of claim **8**, wherein the fitting is configured for releasable attachment to the syringe, and wherein the syringe is configured to generate the pressure.

10. The device of claim **8**, wherein the liquid is a topical anesthetic.

11. The device of claim **8**, wherein the fitting further comprises an insertion stop configured to limit an insertion length within the endotracheal tube.

12. The device of claim **8**, wherein the fitting comprises a Luer-style fitting configured for releasably mating with a Luer-style syringe.

13. The device of claim **8**, further comprising a connector disposed at an end of an elongated tubing, the connector configured for releasably mating with the fitting and the elongated tubing having a length configured for administration of additional liquids at a non-interfering distance from the intubation procedure.

14. The device of claim **8**, further comprising a removable stop configured for attachment to the fitting or the sleeve to limit insertion of the device to a predetermined insertion depth within the endotracheal tube.

* * * * *